Arduino Opta®
Collective Datasheet

Product Reference Manual
SKU: AFX00001-AFX00002-AFX00003

Description

Arduino Opta® is a secure, easy-to-use micro PLC with Industrial IoT capabilities. Designed in partnership with leading relay manufacturer Finder®, it allows professionals to scale up industrial and building automation projects while taking advantage of the Arduino ecosystem.

The Arduino Opta® family has three variants: the Arduino Opta® Lite, Arduino Opta® RS485, and Arduino Opta® WiFi, all of them documented inside this document.

Target Areas:

Industrial IoT, Building automation, Electrical loads management, Industrial automation

CONTENTS

1 Product Variants **4**
2 Application Examples **4**
3 Features **5**
3.1 General Specifications Overview 5
3.2 Processor 5
3.3 Security 6
3.4 Communication 6
3.5 Inputs 6
3.5.1 Analog Inputs 6
3.5.2 Digital Inputs 7
3.6 Outputs 7
4 Ratings **8**
4.1 Recommended Operating Conditions 8
4.2 Power Specification 8
5 Functional Overview **9**
5.1 Product View 9
5.2 Microcontroller 10
5.3 Encryption 10
5.4 Ethernet 10
5.5 Modbus RTU 11
5.6 Wi-Fi® and Bluetooth® Low Energy (AFX00002 Only) 12
5.7 USB-C® 12
5.8 Relay Outputs 12
5.9 Expansion Port 13
5.10 Programmable User Button 13
5.11 Functional Earth 13
6 Device Operation **13**
6.1 Getting Started - IDE 13
6.2 Getting Started - Arduino Web Editor 13
6.3 Getting Started - Arduino PLC IDE 14
6.4 Getting Started - Arduino IoT Cloud 14
6.5 Sample Sketches 14
6.6 Online Resources 14
7 Mechanical Information **15**

7.1 Product Dimensions 15
8 Certifications 16
8.1 Certifications Summary 16
8.2 Declaration of Conformity CE DoC (EU) 17
8.3 Declaration of Conformity to EU RoHS & REACH 211 01/19/2021 17
8.4 Conflict Minerals Declaration 18
9 FCC Caution 19
10 Company Information 20
11 Reference Documentation 20
12 Revision History 20

1 Product Variants

There are three variants of the Arduino Opta® created to fit the different needs of each industry and application. The difference between each of the variants can be found in the following table:

Name	Arduino Opta® Lite	Arduino Opta® RS485	Arduino Opta® WiFi
SKU	AFX00003	AFX00001	AFX00002
USB	USB-C®	USB-C®	USB-C®
Ethernet Support	10/100BASE-T Port	10/100BASE-T Port	10/100BASE-T Port
RS-485	N/A	Half-duplex	Half-duplex
Wi-Fi®	N/A	N/A	802.11 b/g/n
Bluetooth®	N/A	N/A	Bluetooth® Low Energy

2 Application Examples

Arduino Opta® is designed for industrial standard machinery control as a PLC with advanced features such as AI and connectivity capabilities. It is readily integrated into the Arduino hardware and software ecosystem, including real-time monitoring via the Arduino IoT Cloud.

- **Conveyor belt management:** Arduino Opta® offers the possibility to configure its inputs as digital or analog to flexibly collect data from several types of sensors. Thanks to the Wi-Fi®/Bluetooth® Low Energy connectivity, Arduino Opta® can also be smoothly integrated with sensing boards, like the Nicla® ones from the Arduino ecosystem, leveraging Arduino Opta's potential with vision, sound, weight detection, air quality measurement and many other capabilities.

  Arduino Opta® can use the data from the various sensors as they are or, thanks to its powerful microcontroller, use the outcome from a computation, to operate a wide variety of industrial machinery through its high-performing relays.

  All these features, wrapped in a compact form factor, make Arduino Opta® the ideal solution for product flow management in conveyor belts, automated packing or bottling lines.

- **Real-time industrial monitoring:** Get instant access to your factory floor data and to the insights of your industrial processes to leverage your manufacturing excellence to continuous improvement. Implement visual management and KPIs monitoring thanks to the Arduino Opta's built-in connectivity features (Ethernet on all the product variants, Fieldbus and WiFi®/Bluetooth® Low Energy upon choice), delivering in a simple, fast and reliable way the data collected through beautiful dashboards in Arduino IoT Cloud.

- **Predictive maintenance:** Combine the possibility to interact with wireless and wired sensors, given by the multiple connectivity options of Arduino Opta®, with the powerful microcontroller computational capabilities to implement AI algorithms for predictive maintenance. Edge computing and monitoring capabilities, thanks to the Arduino IoT Cloud features, can help to identify small drifts in your processes to address issues before they become a problem, reducing production line downtimes and ensuring quality outcomes.

3 Features

3.1 General Specifications Overview

Characteristics	Details
Supply Voltage	12...24 VDC
Inputs	8x Analog/Digital inputs
Outputs	4x Relays - Normally Open (NO) - Max: 10A each
Processor	Dual-core ST STM32H747XI Processor
Program Memory	1 MB of RAM
Flash Memory	2 MB
Flash QSPI Interface	16 MB Flash QSPI. Shared between manufacturer's internal usage and data logging
Programming method	Arduino + IEC-61131-3 (LD - SFC - FBD - ST - IL)
USB Connectivity	Host and Device operation, Programming/Flashing, Power delivery for programming (Not intended to drive external high-power peripherals)
Communication	Ethernet, RS-485 (AFX00001 & AFX00002), Wi-Fi® 2.4 GHz and Bluetooth® LE 4.2 supported by firmware, 5.1 supported by hardware (AFX00002)
RTC	~10 days, NTP sync through Wi-Fi® (AFX00002 only) or Ethernet
Security	ATECC608B Crypto Microchip
Degree of Protection	IP20
Certifications	cULus, ENEC, FCC, CE, CB, UKCA

3.2 Processor

Component	Details	
ST STM32H747XI Processor	Dual-core	Arm® Cortex®-M7 core at up to 480 MHz + Arm® 32-bit Cortex®-M4 core at up to 240 MHz
	Flash Memory	2 MB of Flash Memory with read-while-write support
	Programming Memory	1 MB of RAM

3.3 Security

Component	Details
ATECC608B Crypto Microchip	Cryptographic co-processor with secure hardware-based key storage
	Protected storage for up to 16 Keys, certificates or data
	Networking key management support
	Secure boot support
	Guaranteed unique 72-bit serial number

3.4 Communication

Interfaces	Type	Protocols/Technologies supported
Ethernet	10/100BASE-T Port	TCP/IP, MODBUS TCP
RS-485	Half-duplex without termination resistance	MODBUS RTU, Custom serial communication
Wireless connectivity	Wi-Fi®	2.4 GHz
Wireless connectivity	Bluetooth® Low Energy	4.2 supported by firmware, 5.1 supported by hardware

3.5 Inputs

Characteristics	Details
Number of inputs	8x Analog/Digital inputs
Inputs overvoltage protection	yes
Antipolarity protection	yes
Input impedance	8.9 kΩ

3.5.1 Analog Inputs

Characteristics	Details
Analog Input voltage	0...10V
Analog Input resolution	12...16 bits - User configurable
Analog Input LSB value	166 µV
Accuracy	+/- 5%, repeatability +/- 2%

3.5.2 Digital Inputs

Characteristics	Details
Digital Input voltage	0...24V
Digital Input voltage logic level	VIL Max: 4.46 VDC. VHL Min: 6.6 VDC
Digital Input current	1.12mA at 10V
Digital Input frequency	4.5 kHz
Cycle time for analog input acquisition	10 µs

3.6 Outputs

Characteristics	Details
Number of outputs	4x relays (NO)
Max current per relay	10A
Max peak current per relay	15A
Continuous current per terminal	10A
Short-circuit protection	No, external fuse required
Relay rated voltage	250 VAC
Relay Max voltage	400 VAC
Rated load AC1	2500 VA
Rated load AC15 (230 VAC)	500 VA
Breaking capacity DC1: 24/30/110/220V	10/4/0.3/0.12A
Minimum switching load	300mW (5V/5mA)
Max output line length (unshielded)	100 m
Relay response time from state 0 to state 1	6 ms for relay output
Relay response time from state 1 to state 0	4 ms for relay output
Bounce time NO	3 ms
Bounce time NC	6 ms
Relay mechanical durability	10 million cycles
Relay electrical durability	10 thousand cycles with a resistive load of 10A

4 Ratings

4.1 Recommended Operating Conditions

Description	Value
Temperature Operating Range	-20...50 °C
Protection degree rating	IP20
Pollution degree	2 conforming to IEC 61010

4.2 Power Specification

Property	Min	Typ	Max	Unit
Supply voltage	12	-	24	V
Permissible range	10.2	-	27.6	V
Power consumption (12V)	0.6	-	2	W
Power consumption (24V)	0.6	-	2.2	W

5 Functional Overview

5.1 Product View

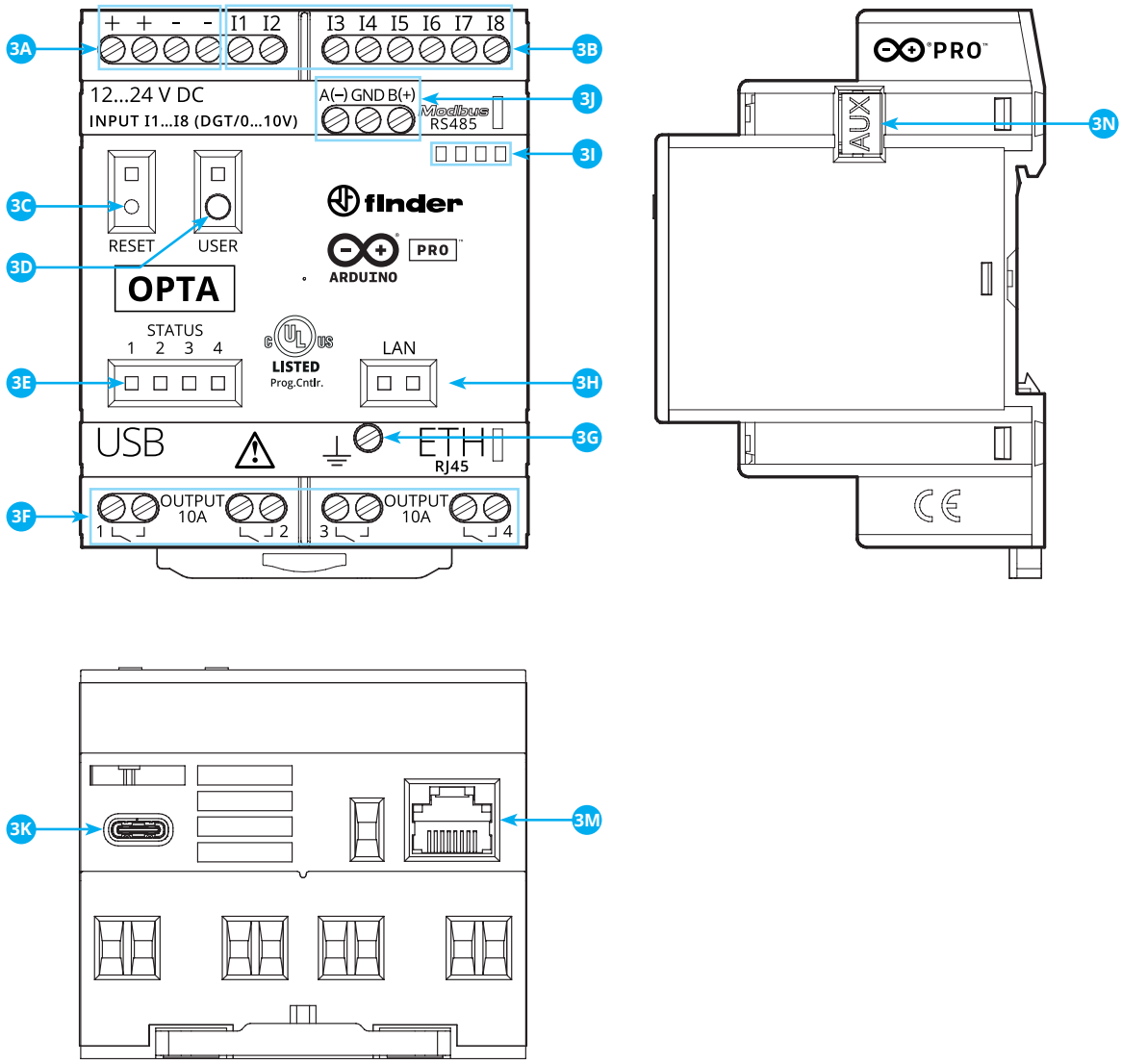

Arduino Opta® Product View

Item	Feature	Item	Feature
3A	Power Supply Terminals 12...24 VDC	3H	Ethernet Port Status LEDs
3B	I1...I8 digital/analog input terminals (0-10V) configurable via IDE	3I	Label Holder
3C	Reset Button	3J	RS-485 terminal block (for Modbus RTU or proprietary communication)
3D	User Programmable button	3K	USB-C® for programming and data logging
3E	Status LEDs 1...4 (User Programmable)	3M	Ethernet port
3F	Relay Output Terminals 1...4, NO contact (SPST) 10A 250 VAC	3N	Port for communication and connection of auxiliary modules
3G	Functional Earth		

Note: The LED above the *User Programmable button* (Ref: 3D) is only available on Arduino Opta® WiFi (AFX00002).

5.2 Microcontroller

The microcontroller is a dual-core *STM32H747XI*. The main processor is a *Cortex M7* running at up to 480 MHz and the second one is a Cortex M4 running at up to 240 MHz.

Arduino Opta® can be programmed using the libraries developed for it as part of the standard Arduino Core library.

5.3 Encryption

Encryption capabilities are provided by the *ATECC608B* chipset. This crypto-chip can be used to store sensitive information like security keys to connect to the Arduino® IoT Cloud or other third-party services, protecting Arduino Opta® from any unauthorized access in any kind of industrial and professional environment.

5.4 Ethernet

TCP/IP and Modbus TCP communication are supported. The 10/100 Ethernet physical interface is directly connected to the internal Ethernet MAC and provides full-duplex communication with automatic MDIX support. With an internet connection, Ethernet communication can be used to connect the device to the Arduino® IoT Cloud or other third-party services.

5.5 Modbus RTU

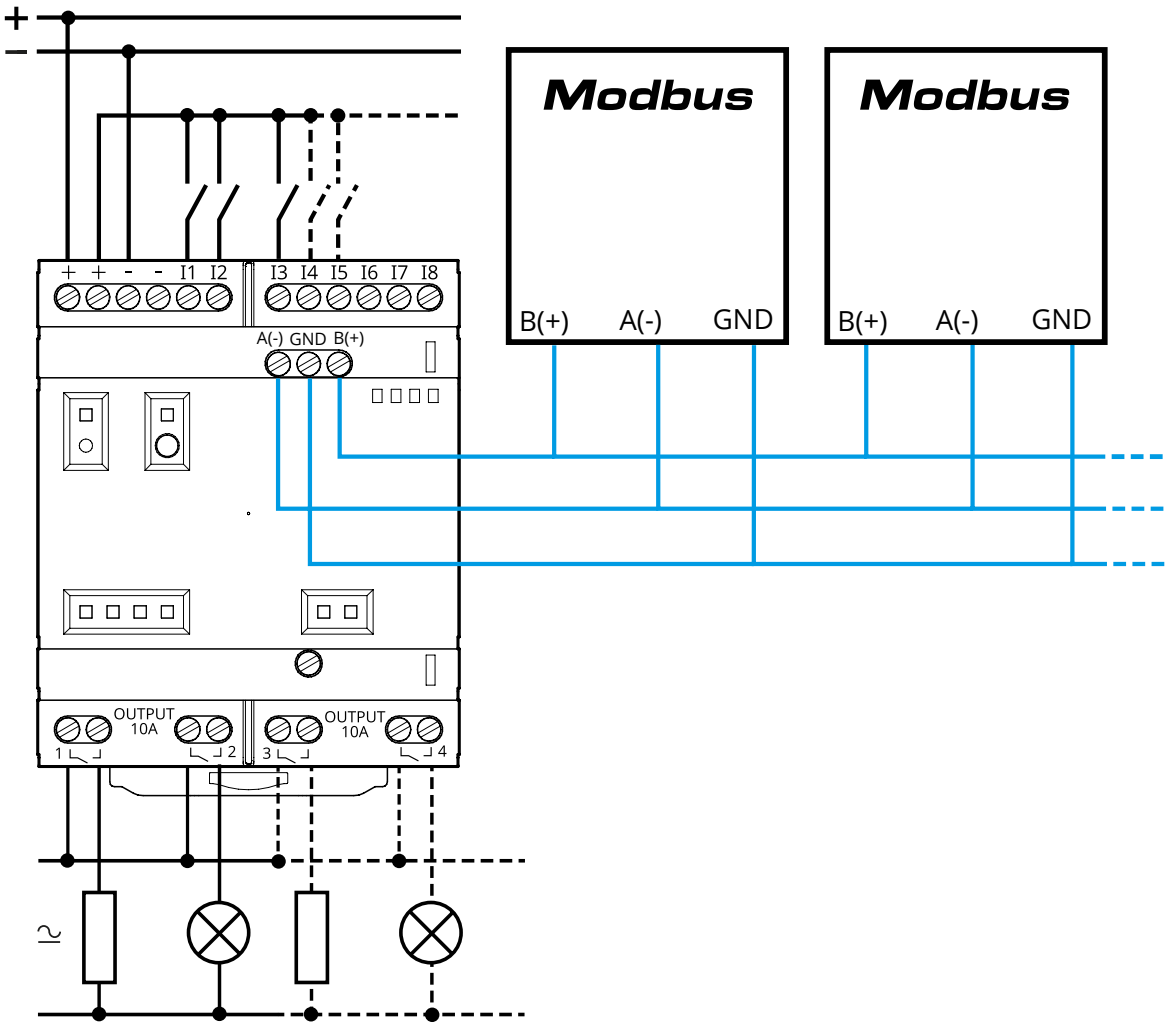

Modbus RTU wiring diagram using the RS-485 interface

Modbus RTU communication is supported using Arduino Opta's RS-485 physical interface. Note that **Arduino Opta® does not have internal terminator resistors** so they need to be added if necessary following the Modbus protocol specification.

The wiring indication may vary depending on the connected device. In case the above connection indication is not resulting in consistent data transmission, invert the wires between A(-) and B(+) and retry.

5.6 Wi-Fi® and Bluetooth® Low Energy (AFX00002 Only)

The onboard wireless module allows simultaneous management of Wi-Fi® and Bluetooth® connectivity. The Wi-Fi® interface can be operated as an Access Point, as a Station or as a dual-mode simultaneous AP/STA, and can handle up to 65 Mbps transfer rate. Bluetooth® interface supports Bluetooth® Low Energy (4.2).

With an internet connection, the Wi-Fi® communication can be used for connecting to the Arduino® IoT Cloud or other third-party services.

5.7 USB-C®

The USB-C® port can be used as a host or as a peripheral, but it cannot be used for both purposes at the same time. It is possible to use the connector to power the processor and flash it, but not to power the PLC outputs and peripherals. Additionally and using a USB memory stick, the USB-C® connector can be used for data logging purposes or to update the program inside the PLC.

5.8 Relay Outputs

Arduino Opta® has four *Normally Open* (NO) powerful 10A relays which are capable of actuating on loads at a rated voltage of 250 VAC and up to a maximum switching voltage of 400 VAC.

The relay *Maximum Peak Current* is defined as the highest value of inrush current that the relay can endure without undergoing any permanent degradation of its characteristics due to the generated heat. The relay has to be able to hold up that maximum using a duty cycle of less or equal to 10% and for a time equal to or less than 0.5 s.

In the case of Arduino Opta®, relays have a *Maximum Peak Current* of 15A.

The *Rated Load* is the maximum resistive load that a contact can make, carry and break repeatedly.

- For resistive or slightly inductive loads (AC1 classification), Arduino Opta's *Rated Load* is 2500 VA.
- For small electromagnetic loads (> 72 VA) (AC15 classification) like power contactors, magnetic solenoid valves, electromagnets and AC single-phase supplies, Arduino Opta's *Rated Load* is 500 VA. This value assumes a peak inrush current of approximately 10 times the rated current and keeping it within the maximum peak current.

For controlling DC loads (DC1 classification), the *Breaking Capacity* or maximum value of DC resistive current that a contact can make, carry and break repeatedly, is 10/4/0.3/0.12A for respectively 24/30/110/220V.

In the case of the minimum switching load parameters, the minimum values of power, voltage and current that the relays can reliably switch, are 300 mW/ 5V / 5mA. This implies that with 5V the current must be at least 60mA, with 24V, it must be at least 12.5mA, and with 5mA the voltage must be at least 60V.

The relays on Arduino Opta® provide a very fast response time of 6/4 ms to change state for closing/reopening, and a bounce time NO/NC of 3/6 ms.

5.9 Expansion Port

The expansion port can be used to expand the Arduino Opta® capabilities with the help of additional modules. Reserved for future functionality.

5.10 Programmable User Button

A pushbutton is accessible on the front panel of the Arduino Opta®. The functionality of this button can be configured via software. Note that the LED above the *User button* is only available on Arduino Opta® WiFi (AFX00002).

5.11 Functional Earth

To avoid and reduce electrical noise, Arduino Opta® has a *Functional Earth* connector (Ref: 3G) near the Ethernet connector. *Functional Earth*, not to be confused with *Ground*, helps the device to reduce electrical interferences in industrial environments, being crucial for having stable Fieldbus communications.

6 Device Operation

6.1 Getting Started - IDE

If you want to program your Arduino Opta® while offline you need to install the Arduino® Desktop IDE **[1]**. To connect the Arduino Opta® to your computer, you will need a USB-C® cable.

6.2 Getting Started - Arduino Web Editor

All Arduino® devices work out-of-the-box on the Arduino® Web Editor **[2]** by just installing a simple plugin.

The Arduino® Web Editor is hosted online, therefore it will always be up-to-date with the latest features and support for all boards and devices. Follow **[3]** to start coding on the browser and upload your sketches onto your device.

6.3 Getting Started - Arduino PLC IDE

Arduino Opta® can be also programmed using the industrial-standard ***IEC 61131-3*** programming languages. Download the Arduino® PLC IDE **[4]** software and connect your Arduino Opta® to your computer, using a simple USB-C® cable, to start creating your own PLC industrial solutions.

6.4 Getting Started - Arduino IoT Cloud

All Arduino® IoT enabled products are supported on Arduino® IoT Cloud which allows you to log, graph and analyze sensor data, trigger events, and automate your home or business.

6.5 Sample Sketches

Sample sketches for Arduino Opta® can be found either in the “Examples” menu in the Arduino® IDE or the “Arduino Opta® Documentation” section of Arduino® **[5]**.

6.6 Online Resources

Now that you have gone through the basics of what you can do with the device, you can explore the endless possibilities it provides by checking exciting projects on ProjectHub **[6]**, the Arduino® Library Reference **[7]** and the online store **[8]** where you will be able to complement your Arduino Opta® product with additional extensions, sensors and actuators.

7 Mechanical Information

7.1 Product Dimensions

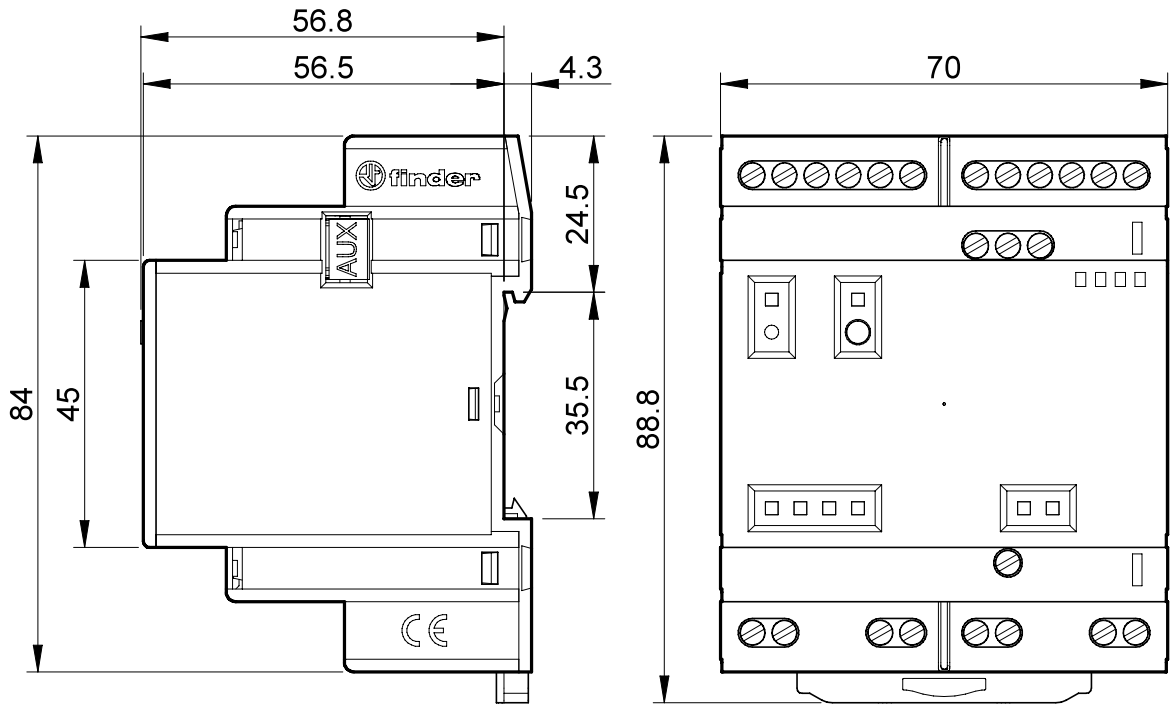

Arduino Opta® Outline. Dimensions are in mm

Note: Terminals can be used with both solid and stranded core wire (min: 0.5 mm^2 / 20 AWG).

8 Certifications

8.1 Certifications Summary

Cert	Arduino Opta® RS485 (AFX00001)	Arduino Opta® WiFi (AFX00002)	Arduino Opta® Lite (AFX00003)
CE (EU)	EN IEC 61326-1:2021 EN IEC 61010 (LVD)	EN IEC 62311:2020 EN IEC 61010 (LVD) EN 301 489-1 V2.2.3 EN 301 489-17 V3.2.4 IEC 61326-1:2021 EN 300 328 V2.2.2:2019-07	EN IEC 61326-1:2021 EN IEC 61010 (LVD)
CB (EU)	Yes	Yes	Yes
WEEE (EU)	Yes	Yes	Yes
ENEC	Yes	Yes	Yes
REACH (EU)	Yes	Yes	Yes
UKCA (UK)	EN IEC 61326-1:2021	EN IEC 62311:2020 EN 300 328 V2.2.2:2019-07 EN 301 489-1 V2.2.3 EN 301 489-17 V3.2.4 IEC 61326-1:2021 EN 300 328 V2.2.2:2019-07	EN IEC 61326-1:2021
FCC (US)	Yes	Yes	Yes
cULus	UL 61010-2-201	UL 61010-2-201	UL 61010-2-201

8.2 Declaration of Conformity CE DoC (EU)

We declare under our sole responsibility that the products above are in conformity with the essential requirements of the following EU Directives and therefore qualify for free movement within markets comprising the European Union (EU) and European Economic Area (EEA).

8.3 Declaration of Conformity to EU RoHS & REACH 211 01/19/2021

Arduino boards are in compliance with RoHS 2 Directive 2011/65/EU of the European Parliament and RoHS 3 Directive 2015/863/EU of the Council of 4 June 2015 on the restriction of the use of certain hazardous substances in electrical and electronic equipment.

Substance	Maximum limit (ppm)
Lead (Pb)	1000
Cadmium (Cd)	100
Mercury (Hg)	1000
Hexavalent Chromium (Cr6+)	1000
Poly Brominated Biphenyls (PBB)	1000
Poly Brominated Diphenyl ethers (PBDE)	1000
Bis(2-Ethylhexyl} phthalate (DEHP)	1000
Benzyl butyl phthalate (BBP)	1000
Dibutyl phthalate (DBP)	1000
Diisobutyl phthalate (DIBP)	1000

Exemptions: No exemptions are claimed.

Arduino Boards are fully compliant with the related requirements of European Union Regulation (EC) 1907 /2006 concerning the Registration, Evaluation, Authorization and Restriction of Chemicals (REACH). We declare none of the SVHCs (https://echa.europa.eu/web/guest/candidate-list-table), the Candidate List of Substances of Very High Concern for authorization currently released by ECHA, is present in all products (and also package) in quantities totaling in a concentration equal or above 0.1%. To the best of our knowledge, we also declare that our products do not contain any of the substances listed on the "Authorization List" (Annex XIV of the REACH regulations) and Substances of Very High Concern (SVHC) in any significant amounts as specified by the Annex XVII of Candidate list published by ECHA (European Chemical Agency) 1907 /2006/EC.

8.4 Conflict Minerals Declaration

As a global supplier of electronic and electrical components, Arduino is aware of our obligations with regards to laws and regulations regarding Conflict Minerals, specifically the Dodd-Frank Wall Street Reform and Consumer Protection Act, Section 1502. Arduino does not directly source or process conflict minerals such as Tin, Tantalum, Tungsten, or Gold. Conflict minerals are contained in our products in the form of solder, or as a component in metal alloys. As part of our reasonable due diligence Arduino has contacted component suppliers within our supply chain to verify their continued compliance with the regulations. Based on the information received thus far we declare that our products contain Conflict Minerals sourced from conflict-free areas.

9 FCC Caution

Any Changes or modifications not expressly approved by the party responsible for compliance could void the user's authority to operate the equipment.

This device complies with part 15 of the FCC Rules. Operation is subject to the following two conditions:

(1) This device may not cause harmful interference

(2) this device must accept any interference received, including interference that may cause undesired operation.

FCC RF Radiation Exposure Statement:

1. This Transmitter must not be co-located or operating in conjunction with any other antenna or transmitter.
2. This equipment complies with RF radiation exposure limits set forth for an uncontrolled environment.
3. This equipment should be installed and operated with a minimum distance of 20 cm between the radiator & your body.

English: User manuals for license-exempt radio apparatus shall contain the following or equivalent notice in a conspicuous location in the user manual or alternatively on the device or both. This device complies with Industry Canada licence-exempt RSS standard(s). Operation is subject to the following two conditions:

(1) this device may not cause interference

(2) this device must accept any interference, including interference that may cause undesired operation of the device.

French: Le présent appareil est conforme aux CNR d'Industrie Canada applicables aux appareils radio exempts de licence. L'exploitation est autorisée aux deux conditions suivantes:

(1) l' appareil nedoit pas produire de brouillage

(2) l'utilisateur de l'appareil doit accepter tout brouillage radioélectrique subi, même si le brouillage est susceptible d'en compromettre le fonctionnement.

IC SAR Warning:

English: This equipment should be installed and operated with a minimum distance of 20 cm between the radiator and your body.

French: Lors de l' installation et de l' exploitation de ce dispositif, la distance entre le radiateur et le corps est d 'au moins 20 cm.

Important: The operating temperature of the EUT can't exceed 85°C and shouldn't be lower than -40°C.

Hereby, Arduino S.r.l. declares that this product is in compliance with essential requirements and other relevant provisions of Directive 2014/53/EU. This product is allowed to be used in all EU member states.

10 Company Information

Company name	Arduino SRL
Company Address	Via Andrea Appiani, 25 - 20900 MONZA Italy)

11 Reference Documentation

Ref	Link
Arduino IDE (Desktop)	https://www.arduino.cc/en/Main/Software
Arduino IDE (Cloud)	https://create.arduino.cc/editor
Arduino Cloud - Getting started	https://docs.arduino.cc/arduino-cloud/getting-started/iot-cloud-getting-started
Arduino PLC IDE	https://www.arduino.cc/en/Main/Software
Arduino Opta® Documentation	https://docs.arduino.cc/hardware/opta
Project Hub	https://create.arduino.cc/projecthub?by=part&part_id=11332&sort=trending
Library Reference	https://www.arduino.cc/reference/en/
Online Store	https://store.arduino.cc/

12 Revision History

Date	Revision	Changes
02/03/2023	1	First Release
04/13/2023	2	Tech Specs Updates